INSTALLATION NOTES

WR 903
SHOWER MODULES

Door Opening 39 3/4" Wide x 76 1/2" High
Soap Dish Height 41"

INSTALLATION NOTES

1. Inspect framed-in area for proper size, square, level, and plumb.
2. Install 1" x 2" mounting plate on front corner posts, header, and floor. See diagram.
3. Position module in framed area. Check to be sure apron is down tight to the floor and side walls are tight to mounting plate.
4. Screw module to mounting plate starting from bottom using countersunk holes provided.
5. Starting from the finished side, drill or hole-saw plumbing hardware holes. Double check hole location prior to drilling.
6. After installation, clean module with warm water and liquid detergent. Paints and other materials can be easily removed without damage to the unit by the use of turpentine, paint thinner.

   To avoid discoloration, cleansers containing petroleum distillates must not remain on acrylic surfaces. Never use lacquer thinner, acetone or chlorinated solvents.
7. Any scratches or dull areas in unit may be removed with automotive type rubbing compound.

NOTE
ALL DIMENSIONS MAY VARY ± 1/4"

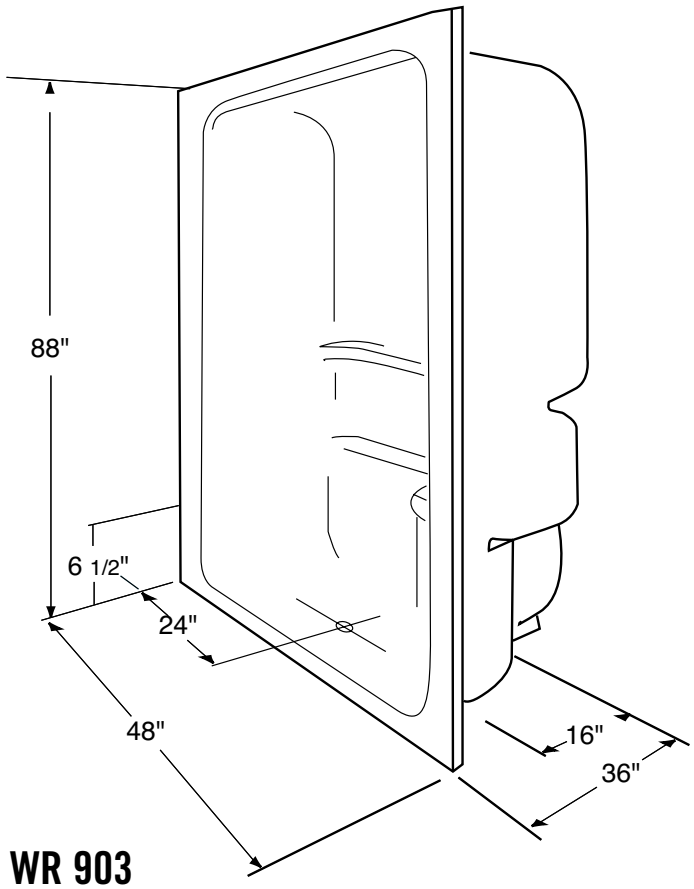

WR 903
NO SEAT

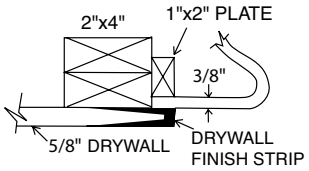

FLUSH INSTALLATION

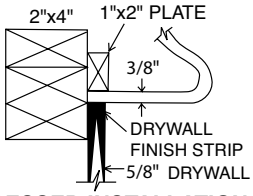

RECESSED INSTALLATION

WARM RAIN
P.O. Box 600 • 51675 N. Industrial Drive • Hancock, MI 49930
Voice: 906-482-3750 • Fax: 906-482-2585 • Email: tedk@warmrain.com • www.warmrain.com

2009